11032 METAL SET

Technical data:

Dimensions	7,1 x 5,85 m
Safe zone	9,6 x 8,35 m
Total height	3,0 m
Free fall height	1,0 m
Age	3+
Conformity with PN-EN 1176	YES
Platform	4x 1,0 m
Slide	2x 1,0 m

11032 METAL SET

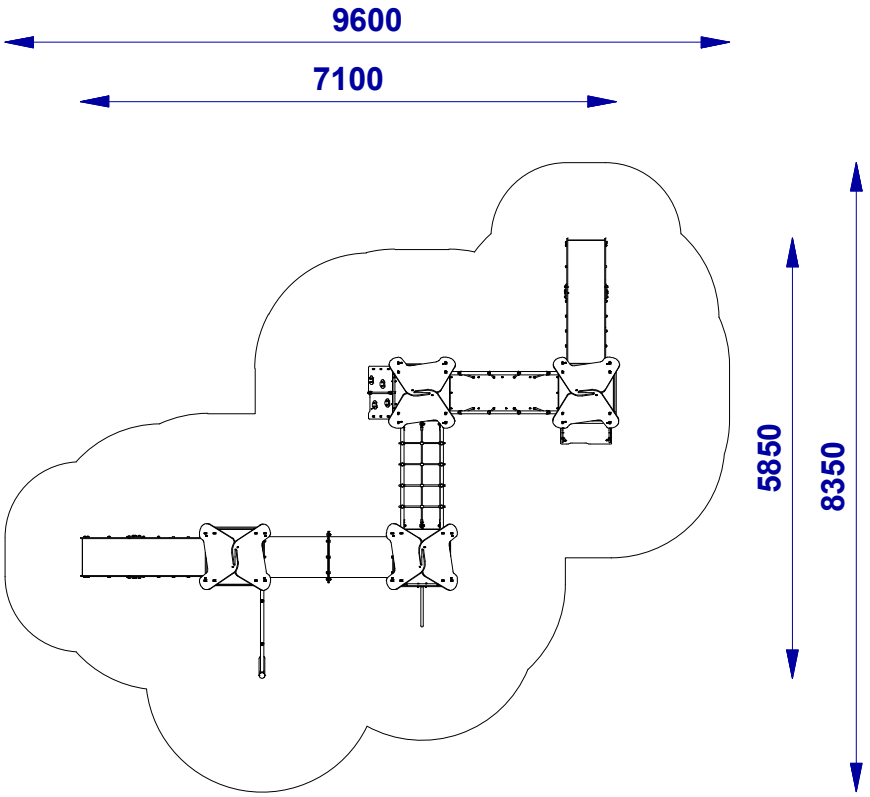

Set contents:	
Module:	Qty:
640.SR.HD.001 BP_WKL	3
640.SR.HD.003 BAL	1
640.SR.HD.004 D2_S	4
640.SR.P.003.002 MT_D	1
640.SR.P.007.0 ML	1
640.SR.P.015 MLBL	1
640.SR.W.001.01000 RS_1000	1
640.SR.W.002.01000 WW_1000	1
640.SR.W.003.01000 SL_1000	2
640.SR.W.006 PS6K	1
640.SR.W.012.01000 DWS_1000	2
640.SR.WR.001.01000 W4D_1000	4

Construction	Galvanized and powder coated steel	✓
	Stainless steel	
	Square 90x90 glued laminated timber, impregnated	
Connectors	Stainless and galvanized	✓
Decorative elements	Polyethylene plastic (HDPE)	✓
	Polycarbonate (PC)	
	Hardwood plywood painted with certified chalkboard paint	
Metal elements	Galvanized and powder coated steel	✓
	Stainless steel	✓
Slide	Stainless steel with polyethylene plastic (HDPE)	✓
	Whole polyethylene plastic (LLDPE)	
	Whole stainless steel	
Ropes	Polypropylene rope with steel core	✓
Rope connectors	Aluminum and polyamide	✓
Caps	Polyamide	✓
Platforms	Polyethylene plastic (HDPE) with antiskid layer	✓
	Grooved board made of solid wood	
Anchoring	Construction elements - 800 mm in ground	✓
	Powder coated steel post - 800 mm in ground	
Chain	Stainless steel	
	Galvanized steel	
Slings	Stainless steel with bearings	
Seats	Flat with aluminum core, covered with rubber, certified	
	Bucket with aluminum core, covered with rubber, certified	
	Rope "Birds nest" with metal core, certified	
Spring	20 x 200 x 400 mm - certified	

Proposal visualisation. Colors can be different. Ask for available options.

In relation to free fall height / HIC, norm PN-EN 1176-1 allow the following impact absorbing surfaces.

Material	Grain size [mm]	Depth [mm]	Critical fall height [mm]
Turf	-	-	≤1000
Bark	20 - 80	200	≤2000
		300	≤3000
Wood chips	5 - 30	200	≤2000
		300	≤3000
Sand	0,25 - 8	200	≤2000
		300	≤3000
Gravel	0,25 - 8	200	≤2000
		300	≤3000
Other	as tested to HIC (see EN 1177)		as tested

It is required to put particular emphasis on the level of loose surface material, fill in to the proper level regularly and remove the items that may cause injury (glass, loose stones, sticks and other loose objects).